


VERSIONE (PIASTRA BASE)
- Versione **C3**: finitura lucida, gomma vulcanizzata, colore nero
- Versione **C4**: finitura lucida, gomma vulcanizzata, colore bianco
- Versione **C7**: finitura lucida, gomma vulcanizzata, colore blu

Versioni degli steli filettati:
- Versione **SK**: esagono esterno in basso.
- Versione **TK**: sede per chiave in basso.
- Versione **VK**: esagono esterno in alto e sede per chiave in basso.
- Versione **W**: con bussola regolabile, di copertura della filettatura e sede per chiave in basso.

Piastra base
Acciaio INOX AISI 304
Stelo filettato
Acciaio INOX AISI 303
Dado esagonale ISO 4032
Acciaio INOX AISI 304
Disco in gomma
- Gomma butadiene acrilonitrile (NBR) versioni C3 e C7.
- Gomma siliconica (MVQ) versione C4.
- A norma FDA
- Durezza 85±5 Shore A
- Vulcanizzata

CARATTERISTICHE E APPLICAZIONI

I piedini di livellamento GN 17 sono adatti a essere utilizzati in ambienti aggressivi.
Le superfici inclinate per il deflusso dei liquidi e l'alta qualità superficiale della piastra base semplificano la pulizia e impediscono l'accumulo di polvere o sporco. Il disco in gomma vulcanizzata a norma FDA sigilla la base contro la superficie di appoggio e consente di utilizzare i piedini ad esempio nelle aree di lavorazione degli alimenti o nell'industria farmaceutica.
I piedini di livellamento vengono forniti montati e non possono essere smontati.

A RICHIESTA

Disco in gomma disponibile in vari colori

CAPACITÀ DI CARICO DEI PIEDINI REGOLABILI

I valori di carico statico indicati in tabella si riferiscono a prove di laboratorio con applicazione del carico perpendicolare alla base (senza disco in gomma).
Per i valori riportati in tabella, la rimozione del carico può provocare lievi deformazioni della piastra base. In condizioni di impiego reali, devono essere tenute in considerazione anche eventuali sollecitazioni laterali o angolari che ne potrebbero ridurre la portata.
I dati relativi alla resistenza sono valori indicativi non vincolanti e non comportano alcuna responsabilità.
Sarà cura dell'utilizzatore determinare caso per caso se il prodotto è adatto per l'impiego previsto.
I fattori ambientali possono influenzare i valori dichiarati.

Proprietà dei modelli riservata ai termini di legge. Disegni e immagini non riproducibili se non citando la fonte.
Ganter Norm

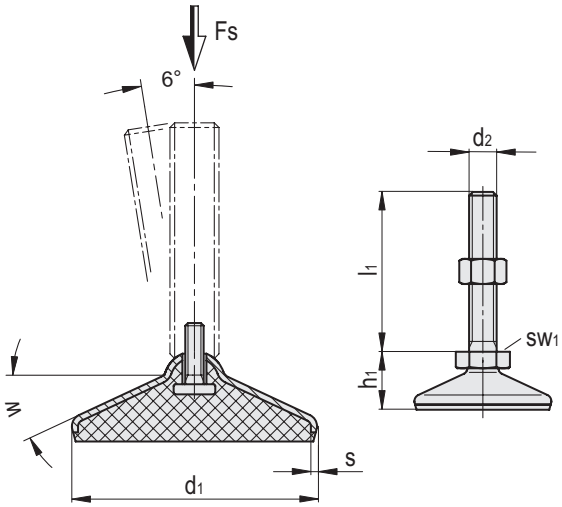

GN 17-SK

INOX STAINLESS STEEL

Codice	Descrizione	d_1	d_2	h_1	l_1	w [°]	s	sw_1	Carico statico [KN]	⚖
GN.20301	GN 17-60-M8-40-C3-SK	60	M8	31	40	32	2	17	8	124
GN.20302	GN 17-60-M8-50-C3-SK	60	M8	31	50	32	2	17	8	127
GN.20303	GN 17-60-M8-63-C3-SK	60	M8	31	63	32	2	17	8	132
GN.20304	GN 17-60-M10-50-C3-SK	60	M10	31	50	32	2	17	14	142
GN.20305	GN 17-60-M10-60-C3-SK	60	M10	31	60	32	2	17	14	146
GN.20306	GN 17-60-M10-80-C3-SK	60	M10	31	80	32	2	17	14	156
GN.20307	GN 17-60-M10-100-C3-SK	60	M10	31	100	32	2	17	14	167
GN.20308	GN 17-60-M12-60-C3-SK	60	M12	31	60	32	2	17	14	163
GN.20309	GN 17-60-M12-80-C3-SK	60	M12	31	80	32	2	17	14	177
GN.20310	GN 17-60-M12-100-C3-SK	60	M12	31	100	32	2	17	14	192
GN.20311	GN 17-60-M12-125-C3-SK	60	M12	31	125	32	2	17	14	209
GN.20312	GN 17-80-M8-40-C3-SK	80	M8	33	40	26	2	17	8	196
GN.20313	GN 17-80-M8-50-C3-SK	80	M8	33	50	26	2	17	8	199
GN.20314	GN 17-80-M8-63-C3-SK	80	M8	33	63	26	2	17	8	204
GN.20315	GN 17-80-M10-50-C3-SK	80	M10	33	50	26	2	17	14	215
GN.20316	GN 17-80-M10-60-C3-SK	80	M10	33	60	26	2	17	14	219
GN.20317	GN 17-80-M10-80-C3-SK	80	M10	33	80	26	2	17	14	229
GN.20318	GN 17-80-M10-100-C3-SK	80	M10	33	100	26	2	17	14	240
GN.20319	GN 17-80-M12-60-C3-SK	80	M12	33	60	26	2	17	14	236
GN.20320	GN 17-80-M12-80-C3-SK	80	M12	33	80	26	2	17	14	250
GN.20321	GN 17-80-M12-100-C3-SK	80	M12	33	100	26	2	17	14	265
GN.20322	GN 17-80-M12-125-C3-SK	80	M12	33	125	26	2	17	14	282
GN.20323	GN 17-100-M8-40-C3-SK	100	M8	35	40	22	2	17	8	291
GN.20324	GN 17-100-M8-50-C3-SK	100	M8	35	50	22	2	17	8	294
GN.20325	GN 17-100-M8-63-C3-SK	100	M8	35	63	22	2	17	8	299
GN.20326	GN 17-100-M10-50-C3-SK	100	M10	35	50	22	2	17	14	310
GN.20327	GN 17-100-M10-60-C3-SK	100	M10	35	60	22	2	17	14	314
GN.20328	GN 17-100-M10-80-C3-SK	100	M10	35	80	22	2	17	14	324
GN.20329	GN 17-100-M10-100-C3-SK	100	M10	35	100	22	2	17	14	335
GN.20330	GN 17-100-M12-60-C3-SK	100	M12	35	60	22	2	17	16	331
GN.20331	GN 17-100-M12-80-C3-SK	100	M12	35	80	22	2	17	16	345
GN.20332	GN 17-100-M12-100-C3-SK	100	M12	35	100	22	2	17	16	360
GN.20333	GN 17-100-M12-125-C3-SK	100	M12	35	125	22	2	17	16	377

Ganter Norm®

Proprietà dei modelli riservata ai termini di legge. Disegni e immagini non riproducibili se non citando la fonte.

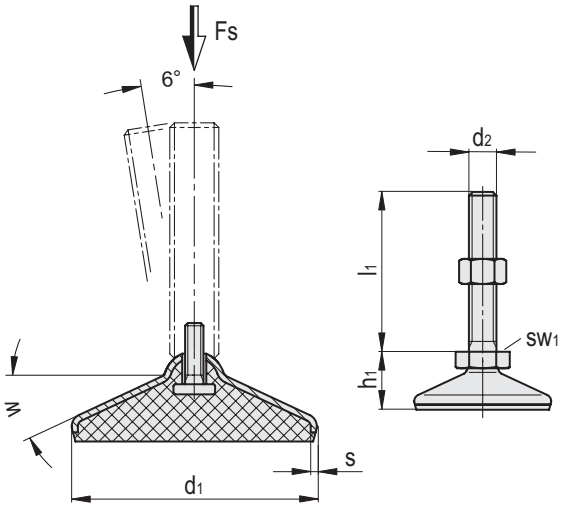

GN 17-SK

INOX STAINLESS STEEL

Codice	Descrizione	d_1	d_2	h_1	l_1	w [°]	s	sw_1	Carico statico [KN]	⚖
GN.85001	GN 17-60-M8-40-C4-SK	60	M8	31	40	32	2	17	8	130
GN.85003	GN 17-60-M8-50-C4-SK	60	M8	31	50	32	2	17	8	134
GN.85005	GN 17-60-M8-63-C4-SK	60	M8	31	63	32	2	17	8	139
GN.85011	GN 17-60-M10-50-C4-SK	60	M10	31	50	32	2	17	14	151
GN.85013	GN 17-60-M10-60-C4-SK	60	M10	31	60	32	2	17	14	157
GN.85015	GN 17-60-M10-80-C4-SK	60	M10	31	80	32	2	17	14	169
GN.85017	GN 17-60-M10-100-C4-SK	60	M10	31	100	32	2	17	14	181
GN.85021	GN 17-60-M12-60-C4-SK	60	M12	31	60	32	2	17	14	179
GN.85023	GN 17-60-M12-80-C4-SK	60	M12	31	80	32	2	17	14	196
GN.85025	GN 17-60-M12-100-C4-SK	60	M12	31	100	32	2	17	14	214
GN.85027	GN 17-60-M12-125-C4-SK	60	M12	31	125	32	2	17	14	236
GN.85081	GN 17-80-M8-40-C4-SK	80	M8	33	40	26	2	17	8	203
GN.85083	GN 17-80-M8-50-C4-SK	80	M8	33	50	26	2	17	8	207
GN.85085	GN 17-80-M8-63-C4-SK	80	M8	33	63	26	2	17	8	212
GN.85091	GN 17-80-M10-50-C4-SK	80	M10	33	50	26	2	17	14	223
GN.85093	GN 17-80-M10-60-C4-SK	80	M10	33	60	26	2	17	14	230
GN.85095	GN 17-80-M10-80-C4-SK	80	M10	33	80	26	2	17	14	242
GN.85097	GN 17-80-M10-100-C4-SK	80	M10	33	100	26	2	17	14	254
GN.85101	GN 17-80-M12-60-C4-SK	80	M12	33	60	26	2	17	14	252
GN.85103	GN 17-80-M12-80-C4-SK	80	M12	33	80	26	2	17	14	269
GN.85105	GN 17-80-M12-100-C4-SK	80	M12	33	100	26	2	17	14	287
GN.85107	GN 17-80-M12-125-C4-SK	80	M12	33	125	26	2	17	14	309
GN.85221	GN 17-100-M8-40-C4-SK	100	M8	35	40	22	2	17	8	298
GN.85223	GN 17-100-M8-50-C4-SK	100	M8	35	50	22	2	17	8	302
GN.85225	GN 17-100-M8-63-C4-SK	100	M8	35	63	22	2	17	8	307
GN.85231	GN 17-100-M10-50-C4-SK	100	M10	35	50	22	2	17	14	318
GN.85233	GN 17-100-M10-60-C4-SK	100	M10	35	60	22	2	17	14	325
GN.85235	GN 17-100-M10-80-C4-SK	100	M10	35	80	22	2	17	14	337
GN.85237	GN 17-100-M10-100-C4-SK	100	M10	35	100	22	2	17	14	349
GN.85241	GN 17-100-M12-60-C4-SK	100	M12	35	60	22	2	17	16	347
GN.85243	GN 17-100-M12-80-C4-SK	100	M12	35	80	22	2	17	16	364
GN.85245	GN 17-100-M12-100-C4-SK	100	M12	35	100	22	2	17	16	382
GN.85247	GN 17-100-M12-125-C4-SK	100	M12	35	125	22	2	17	16	404

Proprietà dei modelli riservata ai termini di legge. Disegni e immagini non riproducibili se non citando la fonte.

Ganter Norm

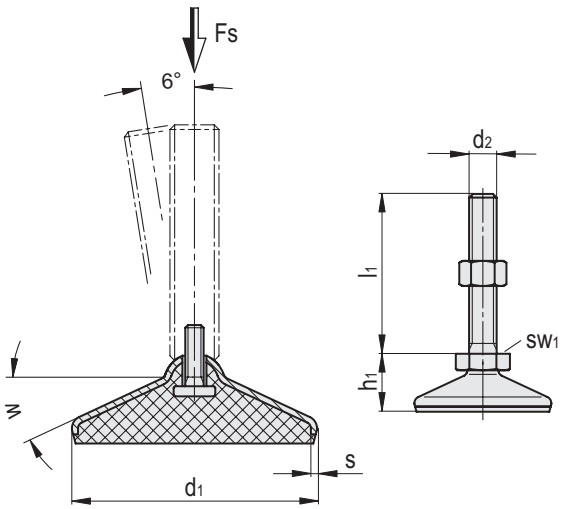

GN 17-SK

INOX STAINLESS STEEL

Codice	Descrizione	d_1	d_2	h_1	l_1	w [°]	s	sw_1	Carico statico [KN]	⚖
GN.85002	GN 17-60-M8-40-C7-SK	60	M8	31	40	32	2	17	8	130
GN.85004	GN 17-60-M8-50-C7-SK	60	M8	31	50	32	2	17	8	134
GN.85006	GN 17-60-M8-63-C7-SK	60	M8	31	63	32	2	17	8	139
GN.85012	GN 17-60-M10-50-C7-SK	60	M10	31	50	32	2	17	14	151
GN.85014	GN 17-60-M10-60-C7-SK	60	M10	31	60	32	2	17	14	157
GN.85016	GN 17-60-M10-80-C7-SK	60	M10	31	80	32	2	17	14	169
GN.85018	GN 17-60-M10-100-C7-SK	60	M10	31	100	32	2	17	14	181
GN.85022	GN 17-60-M12-60-C7-SK	60	M12	31	60	32	2	17	14	179
GN.85024	GN 17-60-M12-80-C7-SK	60	M12	31	80	32	2	17	14	196
GN.85026	GN 17-60-M12-100-C7-SK	60	M12	31	100	32	2	17	14	214
GN.85028	GN 17-60-M12-125-C7-SK	60	M12	31	125	32	2	17	14	236
GN.85082	GN 17-80-M8-40-C7-SK	80	M8	33	40	26	2	17	8	203
GN.85084	GN 17-80-M8-50-C7-SK	80	M8	33	50	26	2	17	8	207
GN.85086	GN 17-80-M8-63-C7-SK	80	M8	33	63	26	2	17	8	212
GN.85092	GN 17-80-M10-50-C7-SK	80	M10	33	50	26	2	17	14	223
GN.85094	GN 17-80-M10-60-C7-SK	80	M10	33	60	26	2	17	14	230
GN.85096	GN 17-80-M10-80-C7-SK	80	M10	33	80	26	2	17	14	242
GN.85098	GN 17-80-M10-100-C7-SK	80	M10	33	100	26	2	17	14	254
GN.85102	GN 17-80-M12-60-C7-SK	80	M12	33	60	26	2	17	14	252
GN.85104	GN 17-80-M12-80-C7-SK	80	M12	33	80	26	2	17	14	269
GN.85106	GN 17-80-M12-100-C7-SK	80	M12	33	100	26	2	17	14	287
GN.85108	GN 17-80-M12-125-C7-SK	80	M12	33	125	26	2	17	14	309
GN.85222	GN 17-100-M8-40-C7-SK	100	M8	35	40	22	2	17	8	298
GN.85224	GN 17-100-M8-50-C7-SK	100	M8	35	50	22	2	17	8	302
GN.85226	GN 17-100-M8-63-C7-SK	100	M8	35	63	22	2	17	8	307
GN.85232	GN 17-100-M10-50-C7-SK	100	M10	35	50	22	2	17	14	318
GN.85234	GN 17-100-M10-60-C7-SK	100	M10	35	60	22	2	17	14	325
GN.85236	GN 17-100-M10-80-C7-SK	100	M10	35	80	22	2	17	14	337
GN.85238	GN 17-100-M10-100-C7-SK	100	M10	35	100	22	2	17	14	349
GN.85242	GN 17-100-M12-60-C7-SK	100	M12	35	60	22	2	17	16	347
GN.85244	GN 17-100-M12-80-C7-SK	100	M12	35	80	22	2	17	16	364
GN.85246	GN 17-100-M12-100-C7-SK	100	M12	35	100	22	2	17	16	382
GN.85248	GN 17-100-M12-125-C7-SK	100	M12	35	125	22	2	17	16	404

Ganter Norm®

Proprietà dei modelli riservata ai termini di legge. Disegni e immagini non riproducibili se non citando la fonte.

7/2026

elesa®

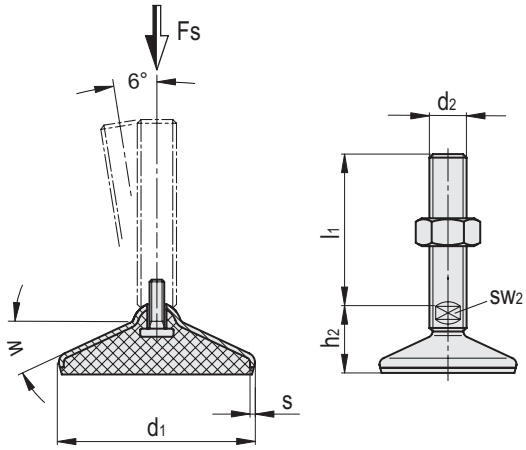

GN 17-TK

INOX STAINLESS STEEL

Codice	Descrizione	d_1	d_2	l_1	h_2	w [°]	s	sw_2	Carico statico [KN]	⚖
GN.20351	GN 17-60-M16-75-C3-TK	60	M16	75	37	32	2	12	14	238
GN.20352	GN 17-60-M16-100-C3-TK	60	M16	100	37	32	2	12	14	271
GN.20353	GN 17-60-M16-125-C3-TK	60	M16	125	37	32	2	12	14	303
GN.20354	GN 17-60-M16-150-C3-TK	60	M16	150	37	32	2	12	14	335
GN.20355	GN 17-60-M16-200-C3-TK	60	M16	200	37	32	2	12	14	399
GN.20356	GN 17-60-M16-250-C3-TK	60	M16	250	37	32	2	12	14	463
GN.20357	GN 17-80-M16-75-C3-TK	80	M16	75	39	26	2	12	14	311
GN.20358	GN 17-80-M16-100-C3-TK	80	M16	100	39	26	2	12	14	344
GN.20359	GN 17-80-M16-125-C3-TK	80	M16	125	39	26	2	12	14	376
GN.20360	GN 17-80-M16-150-C3-TK	80	M16	150	39	26	2	12	14	408
GN.20361	GN 17-80-M16-200-C3-TK	80	M16	200	39	26	2	12	14	472
GN.20362	GN 17-80-M16-250-C3-TK	80	M16	250	39	26	2	12	14	536
GN.20363	GN 17-80-M20-75-C3-TK	80	M20	75	39	26	2	15	32	393
GN.20364	GN 17-80-M20-100-C3-TK	80	M20	100	39	26	2	15	32	452
GN.20365	GN 17-80-M20-125-C3-TK	80	M20	125	39	26	2	15	32	502
GN.20366	GN 17-80-M20-150-C3-TK	80	M20	150	39	26	2	15	32	553
GN.20367	GN 17-80-M20-200-C3-TK	80	M20	200	39	26	2	15	32	653
GN.20368	GN 17-80-M20-250-C3-TK	80	M20	250	39	26	2	15	32	753
GN.20369	GN 17-80-M24-100-C3-TK	80	M24	100	41	26	2	19	36	605
GN.20370	GN 17-80-M24-125-C3-TK	80	M24	125	41	26	2	19	36	685
GN.20371	GN 17-80-M24-150-C3-TK	80	M24	150	41	26	2	19	36	751
GN.20372	GN 17-80-M24-200-C3-TK	80	M24	200	41	26	2	19	36	897
GN.20373	GN 17-80-M24-300-C3-TK	80	M24	300	41	26	2	19	36	1447
GN.20374	GN 17-100-M16-75-C3-TK	100	M16	75	41	22	2	12	24	406
GN.20375	GN 17-100-M16-100-C3-TK	100	M16	100	41	22	2	12	24	439
GN.20376	GN 17-100-M16-125-C3-TK	100	M16	125	41	22	2	12	24	471
GN.20377	GN 17-100-M16-150-C3-TK	100	M16	150	41	22	2	12	24	503
GN.20378	GN 17-100-M16-200-C3-TK	100	M16	200	41	22	2	12	24	567
GN.20379	GN 17-100-M16-250-C3-TK	100	M16	250	41	22	2	12	24	631
GN.20380	GN 17-100-M20-75-C3-TK	100	M20	75	41	22	2	15	26	488
GN.20381	GN 17-100-M20-100-C3-TK	100	M20	100	41	22	2	15	26	547
GN.20382	GN 17-100-M20-125-C3-TK	100	M20	125	41	22	2	15	26	597
GN.20383	GN 17-100-M20-150-C3-TK	100	M20	150	41	22	2	15	26	648
GN.20384	GN 17-100-M20-200-C3-TK	100	M20	200	41	22	2	15	26	748
GN.20385	GN 17-100-M20-250-C3-TK	100	M20	250	41	22	2	15	26	848
GN.20386	GN 17-100-M24-100-C3-TK	100	M24	100	43	22	2	19	28	700
GN.20387	GN 17-100-M24-125-C3-TK	100	M24	125	43	22	2	19	28	780
GN.20388	GN 17-100-M24-150-C3-TK	100	M24	150	43	22	2	19	28	846
GN.20389	GN 17-100-M24-200-C3-TK	100	M24	200	43	22	2	19	28	992
GN.20390	GN 17-100-M24-300-C3-TK	100	M24	300	43	22	2	19	28	1542
GN.20391	GN 17-120-M20-75-C3-TK	120	M20	75	43	20	2	15	26	609
GN.20392	GN 17-120-M20-100-C3-TK	120	M20	100	43	20	2	15	26	668
GN.20393	GN 17-120-M20-125-C3-TK	120	M20	125	43	20	2	15	26	718
GN.20394	GN 17-120-M20-150-C3-TK	120	M20	150	43	20	2	15	26	769
GN.20395	GN 17-120-M20-200-C3-TK	120	M20	200	43	20	2	15	26	869
GN.20396	GN 17-120-M20-250-C3-TK	120	M20	250	43	20	2	15	26	969
GN.20397	GN 17-120-M24-100-C3-TK	120	M24	100	46	20	2	19	26	821
GN.20398	GN 17-120-M24-125-C3-TK	120	M24	125	46	20	2	19	26	901
GN.20399	GN 17-120-M24-150-C3-TK	120	M24	150	46	20	2	19	26	967
GN.20400	GN 17-120-M24-200-C3-TK	120	M24	200	46	20	2	19	26	1113
GN.20401	GN 17-120-M24-300-C3-TK	120	M24	300	46	20	2	19	26	1663
GN.20402	GN 17-120-M30-100-C3-TK	120	M30	100	50	20	2	24	26	1163
GN.20403	GN 17-120-M30-125-C3-TK	120	M30	125	50	20	2	24	26	1259
GN.20404	GN 17-120-M30-150-C3-TK	120	M30	150	50	20	2	24	26	1377
GN.20405	GN 17-120-M30-200-C3-TK	120	M30	200	50	20	2	24	26	1614
GN.20406	GN 17-120-M30-300-C3-TK	120	M30	300	50	20	2	24	26	2125

Proprietà dei modelli riservata ai termini di legge. Disegni e immagini non riproducibili se non citando la fonte.

Ganter Norm

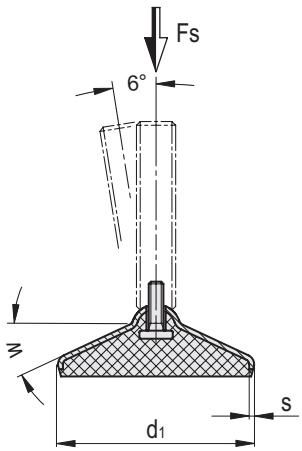

GN 17-TK

INOX STAINLESS STEEL

Codice	Descrizione	d_1	d_2	l_1	h_2	w [°]	s	sw_2	Carico statico [KN]	⚖
GN.85031	GN 17-60-M16-75-C4-TK	60	M16	75	37	32	2	12	14	273
GN.85035	GN 17-60-M16-100-C4-TK	60	M16	100	37	32	2	12	14	312
GN.85039	GN 17-60-M16-125-C4-TK	60	M16	125	37	32	2	12	14	351
GN.85045	GN 17-60-M16-150-C4-TK	60	M16	150	37	32	2	12	14	390
GN.85053	GN 17-60-M16-200-C4-TK	60	M16	200	37	32	2	12	14	469
GN.85057	GN 17-60-M16-250-C4-TK	60	M16	250	37	32	2	12	14	547
GN.85111	GN 17-80-M16-75-C4-TK	80	M16	75	39	26	2	12	14	345
GN.85115	GN 17-80-M16-100-C4-TK	80	M16	100	39	26	2	12	14	385
GN.85119	GN 17-80-M16-125-C4-TK	80	M16	125	39	26	2	12	14	424
GN.85125	GN 17-80-M16-150-C4-TK	80	M16	150	39	26	2	12	14	463
GN.85133	GN 17-80-M16-200-C4-TK	80	M16	200	39	26	2	12	14	541
GN.85137	GN 17-80-M16-250-C4-TK	80	M16	250	39	26	2	12	14	620
GN.85141	GN 17-80-M20-75-C4-TK	80	M20	75	39	26	2	15	32	458
GN.85143	GN 17-80-M20-100-C4-TK	80	M20	100	39	26	2	15	32	519
GN.85147	GN 17-80-M20-125-C4-TK	80	M20	125	39	26	2	15	32	580
GN.85151	GN 17-80-M20-150-C4-TK	80	M20	150	39	26	2	15	32	642
GN.85159	GN 17-80-M20-200-C4-TK	80	M20	200	39	26	2	15	32	764
GN.85165	GN 17-80-M20-250-C4-TK	80	M20	250	39	26	2	15	32	887
GN.85171	GN 17-80-M24-100-C4-TK	80	M24	100	41	26	2	19	36	702
GN.85175	GN 17-80-M24-125-C4-TK	80	M24	125	41	26	2	19	36	790
GN.85177	GN 17-80-M24-150-C4-TK	80	M24	150	41	26	2	19	36	878
GN.85183	GN 17-80-M24-200-C4-TK	80	M24	200	41	26	2	19	36	1055
GN.85191	GN 17-80-M24-300-C4-TK	80	M24	300	41	26	2	19	36	1410
GN.85251	GN 17-100-M16-75-C4-TK	100	M16	75	41	22	2	12	24	440
GN.85255	GN 17-100-M16-100-C4-TK	100	M16	100	41	22	2	12	24	480
GN.85259	GN 17-100-M16-125-C4-TK	100	M16	125	41	22	2	12	24	519
GN.85265	GN 17-100-M16-150-C4-TK	100	M16	150	41	22	2	12	24	558
GN.85273	GN 17-100-M16-200-C4-TK	100	M16	200	41	22	2	12	24	636
GN.85277	GN 17-100-M16-250-C4-TK	100	M16	250	41	22	2	12	24	715
GN.85281	GN 17-100-M20-75-C4-TK	100	M20	75	41	22	2	15	26	553
GN.85283	GN 17-100-M20-100-C4-TK	100	M20	100	41	22	2	15	26	614
GN.85287	GN 17-100-M20-125-C4-TK	100	M20	125	41	22	2	15	26	675
GN.85291	GN 17-100-M20-150-C4-TK	100	M20	150	41	22	2	15	26	736
GN.85299	GN 17-100-M20-200-C4-TK	100	M20	200	41	22	2	15	26	859
GN.85305	GN 17-100-M20-250-C4-TK	100	M20	250	41	22	2	15	26	982
GN.85311	GN 17-100-M24-100-C4-TK	100	M24	100	43	22	2	19	28	797
GN.85315	GN 17-100-M24-125-C4-TK	100	M24	125	43	22	2	19	28	885
GN.85317	GN 17-100-M24-150-C4-TK	100	M24	150	43	22	2	19	28	973
GN.85323	GN 17-100-M24-200-C4-TK	100	M24	200	43	22	2	19	28	1150
GN.85331	GN 17-100-M24-300-C4-TK	100	M24	300	43	22	2	19	28	1505
GN.85351	GN 17-120-M20-75-C4-TK	120	M20	75	43	20	2	15	26	674
GN.85353	GN 17-120-M20-100-C4-TK	120	M20	100	43	20	2	15	26	735
GN.85355	GN 17-120-M20-125-C4-TK	120	M20	125	43	20	2	15	26	797
GN.85357	GN 17-120-M20-150-C4-TK	120	M20	150	43	20	2	15	26	858
GN.85359	GN 17-120-M20-200-C4-TK	120	M20	200	43	20	2	15	26	980
GN.85361	GN 17-120-M20-250-C4-TK	120	M20	250	43	20	2	15	26	1105
GN.85371	GN 17-120-M24-100-C4-TK	120	M24	100	46	20	2	19	26	918
GN.85373	GN 17-120-M24-125-C4-TK	120	M24	125	46	20	2	19	26	1005
GN.85375	GN 17-120-M24-150-C4-TK	120	M24	150	46	20	2	19	26	1095
GN.85377	GN 17-120-M24-200-C4-TK	120	M24	200	46	20	2	19	26	1270
GN.85379	GN 17-120-M24-300-C4-TK	120	M24	300	46	20	2	19	26	1625
GN.85391	GN 17-120-M30-100-C4-TK	120	M30	100	50	20	2	24	26	1295
GN.85393	GN 17-120-M30-125-C4-TK	120	M30	125	50	20	2	24	26	1430
GN.85395	GN 17-120-M30-150-C4-TK	120	M30	150	50	20	2	24	26	1570
GN.85397	GN 17-120-M30-200-C4-TK	120	M30	200	50	20	2	24	26	1845
GN.85399	GN 17-120-M30-300-C4-TK	120	M30	300	50	20	2	24	26	2395

Ganter Norm®

Proprietà dei modelli riservata ai termini di legge. Disegni e immagini non riproducibili se non citando la fonte.

7/2026

elesa®

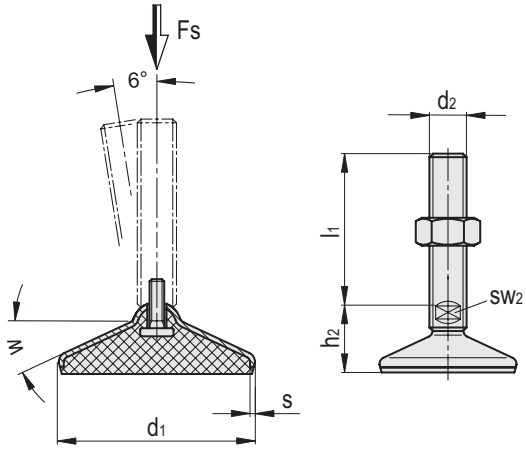

GN 17-TK

INOX STAINLESS STEEL

Codice	Descrizione	d_1	d_2	l_1	h_2	w [°]	s	sw_2	Carico statico [KN]	⚖
GN.85033	GN 17-60-M16-75-C7-TK	60	M16	75	37	32	2	12	14	273
GN.85037	GN 17-60-M16-100-C7-TK	60	M16	100	37	32	2	12	14	312
GN.85041	GN 17-60-M16-125-C7-TK	60	M16	125	37	32	2	12	14	351
GN.85047	GN 17-60-M16-150-C7-TK	60	M16	150	37	32	2	12	14	390
GN.85054	GN 17-60-M16-200-C7-TK	60	M16	200	37	32	2	12	14	469
GN.85058	GN 17-60-M16-250-C7-TK	60	M16	250	37	32	2	12	14	547
GN.85113	GN 17-80-M16-75-C7-TK	80	M16	75	39	26	2	12	14	345
GN.85117	GN 17-80-M16-100-C7-TK	80	M16	100	39	26	2	12	14	385
GN.85121	GN 17-80-M16-125-C7-TK	80	M16	125	39	26	2	12	14	424
GN.85127	GN 17-80-M16-150-C7-TK	80	M16	150	39	26	2	12	14	463
GN.85134	GN 17-80-M16-200-C7-TK	80	M16	200	39	26	2	12	14	541
GN.85138	GN 17-80-M16-250-C7-TK	80	M16	250	39	26	2	12	14	620
GN.85142	GN 17-80-M20-75-C7-TK	80	M20	75	39	26	2	15	32	458
GN.85145	GN 17-80-M20-100-C7-TK	80	M20	100	39	26	2	15	32	519
GN.85149	GN 17-80-M20-125-C7-TK	80	M20	125	39	26	2	15	32	580
GN.85153	GN 17-80-M20-150-C7-TK	80	M20	150	39	26	2	15	32	642
GN.85161	GN 17-80-M20-200-C7-TK	80	M20	200	39	26	2	15	32	764
GN.85166	GN 17-80-M20-250-C7-TK	80	M20	250	39	26	2	15	32	887
GN.85173	GN 17-80-M24-100-C7-TK	80	M24	100	41	26	2	19	36	702
GN.85176	GN 17-80-M24-125-C7-TK	80	M24	125	41	26	2	19	36	790
GN.85179	GN 17-80-M24-150-C7-TK	80	M24	150	41	26	2	19	36	878
GN.85185	GN 17-80-M24-200-C7-TK	80	M24	200	41	26	2	19	36	1055
GN.85192	GN 17-80-M24-300-C7-TK	80	M24	300	41	26	2	19	36	1410
GN.85253	GN 17-100-M16-75-C7-TK	100	M16	75	41	22	2	12	24	440
GN.85257	GN 17-100-M16-100-C7-TK	100	M16	100	41	22	2	12	24	480
GN.85261	GN 17-100-M16-125-C7-TK	100	M16	125	41	22	2	12	24	519
GN.85267	GN 17-100-M16-150-C7-TK	100	M16	150	41	22	2	12	24	558
GN.85274	GN 17-100-M16-200-C7-TK	100	M16	200	41	22	2	12	24	636
GN.85278	GN 17-100-M16-250-C7-TK	100	M16	250	41	22	2	12	24	715
GN.85282	GN 17-100-M20-75-C7-TK	100	M20	75	41	22	2	15	26	553
GN.85285	GN 17-100-M20-100-C7-TK	100	M20	100	41	22	2	15	26	614
GN.85289	GN 17-100-M20-125-C7-TK	100	M20	125	41	22	2	15	26	675
GN.85293	GN 17-100-M20-150-C7-TK	100	M20	150	41	22	2	15	26	736
GN.85301	GN 17-100-M20-200-C7-TK	100	M20	200	41	22	2	15	26	859
GN.85306	GN 17-100-M20-250-C7-TK	100	M20	250	41	22	2	15	26	982
GN.85313	GN 17-100-M24-100-C7-TK	100	M24	100	43	22	2	19	28	797
GN.85316	GN 17-100-M24-125-C7-TK	100	M24	125	43	22	2	19	28	885
GN.85319	GN 17-100-M24-150-C7-TK	100	M24	150	43	22	2	19	28	973
GN.85325	GN 17-100-M24-200-C7-TK	100	M24	200	43	22	2	19	28	1150
GN.85332	GN 17-100-M24-300-C7-TK	100	M24	300	43	22	2	19	28	1505
GN.85352	GN 17-120-M20-75-C7-TK	120	M20	75	43	20	2	15	26	674
GN.85354	GN 17-120-M20-100-C7-TK	120	M20	100	43	20	2	15	26	735
GN.85356	GN 17-120-M20-125-C7-TK	120	M20	125	43	20	2	15	26	797
GN.85358	GN 17-120-M20-150-C7-TK	120	M20	150	43	20	2	15	26	858
GN.85360	GN 17-120-M20-200-C7-TK	120	M20	200	43	20	2	15	26	980
GN.85362	GN 17-120-M20-250-C7-TK	120	M20	250	43	20	2	15	26	1105
GN.85372	GN 17-120-M24-100-C7-TK	120	M24	100	46	20	2	19	26	918
GN.85374	GN 17-120-M24-125-C7-TK	120	M24	125	46	20	2	19	26	1005
GN.85376	GN 17-120-M24-150-C7-TK	120	M24	150	46	20	2	19	26	1095
GN.85378	GN 17-120-M24-200-C7-TK	120	M24	200	46	20	2	19	26	1270
GN.85380	GN 17-120-M24-300-C7-TK	120	M24	300	46	20	2	19	26	1625
GN.85392	GN 17-120-M30-100-C7-TK	120	M30	100	50	20	2	24	26	1295
GN.85394	GN 17-120-M30-125-C7-TK	120	M30	125	50	20	2	24	26	1430
GN.85396	GN 17-120-M30-150-C7-TK	120	M30	150	50	20	2	24	26	1570
GN.85398	GN 17-120-M30-200-C7-TK	120	M30	200	50	20	2	24	26	1845
GN.85400	GN 17-120-M30-300-C7-TK	120	M30	300	50	20	2	24	26	2395

Proprietà dei modelli riservata ai termini di legge. Disegni e immagini non riproducibili se non citando la fonte.

Ganter Norm

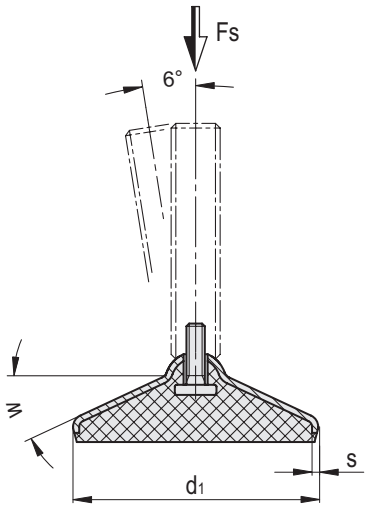

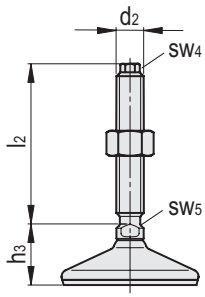

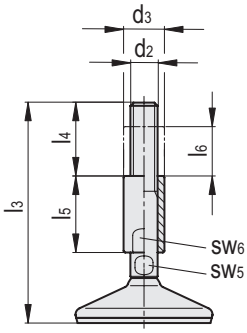

GN 17-VK

INOX STAINLESS STEEL

Codice	Descrizione	l_2	d_1	d_2	h_3	w [°]	s	sw_4	sw_5	Carico statico [KN]	⚖
GN.20421	GN 17-60-M16-75-C3-VK	75	60	M16	33	32	2	10	12	14	229
GN.20422	GN 17-60-M16-100-C3-VK	100	60	M16	33	32	2	10	12	14	263
GN.20423	GN 17-60-M16-125-C3-VK	125	60	M16	33	32	2	10	12	14	295
GN.20424	GN 17-60-M16-150-C3-VK	150	60	M16	33	32	2	10	12	14	328
GN.20425	GN 17-80-M16-75-C3-VK	75	80	M16	35	26	2	10	12	14	302
GN.20426	GN 17-80-M16-100-C3-VK	100	80	M16	35	26	2	10	12	14	336
GN.20427	GN 17-80-M16-125-C3-VK	125	80	M16	35	26	2	10	12	14	368
GN.20428	GN 17-80-M16-150-C3-VK	150	80	M16	35	26	2	10	12	14	401
GN.20429	GN 17-80-M20-100-C3-VK	100	80	M20	36	26	2	13	16	32	443
GN.20430	GN 17-80-M20-125-C3-VK	125	80	M20	36	26	2	13	16	32	494
GN.20431	GN 17-80-M20-150-C3-VK	150	80	M20	36	26	2	13	16	32	546
GN.20432	GN 17-80-M20-200-C3-VK	200	80	M20	36	26	2	13	16	32	651
GN.20433	GN 17-80-M24-100-C3-VK	100	80	M24	38	26	2	17	20	36	591
GN.20434	GN 17-80-M24-150-C3-VK	150	80	M24	38	26	2	17	20	36	739
GN.20435	GN 17-80-M24-200-C3-VK	200	80	M24	38	26	2	17	20	36	885
GN.20436	GN 17-100-M16-75-C3-VK	75	100	M16	37	22	2	10	12	24	397
GN.20437	GN 17-100-M16-100-C3-VK	100	100	M16	37	22	2	10	12	24	431
GN.20438	GN 17-100-M16-125-C3-VK	125	100	M16	37	22	2	10	12	24	463
GN.20439	GN 17-100-M16-150-C3-VK	150	100	M16	37	22	2	10	12	24	496
GN.20440	GN 17-100-M20-100-C3-VK	100	100	M20	38	22	2	13	16	26	538
GN.20441	GN 17-100-M20-125-C3-VK	125	100	M20	38	22	2	13	16	26	589
GN.20442	GN 17-100-M20-150-C3-VK	150	100	M20	38	22	2	13	16	26	641
GN.20443	GN 17-100-M20-200-C3-VK	200	100	M20	38	22	2	13	16	26	746
GN.20444	GN 17-100-M24-100-C3-VK	100	100	M24	40	22	2	17	20	28	686
GN.20445	GN 17-100-M24-150-C3-VK	150	100	M24	40	22	2	17	20	28	834
GN.20446	GN 17-100-M24-200-C3-VK	200	100	M24	40	22	2	17	20	28	980

GN 17-W

Codice	Descrizione	l_3	d_1	l_4	l_5	l_6	d_2	d_3	w [°]	s	sw_5	sw_6	Carico statico [KN]	⚖
GN.20461	GN 17-60-M16-129-C3-W	129	60	45	45	29	M16	24	32	2	12	20	14	327
GN.20462	GN 17-60-M16-154-C3-W	154	60	45	45	29	M16	24	32	2	12	20	14	364
GN.20463	GN 17-60-M16-179-C3-W	179	60	45	45	29	M16	24	32	2	12	20	14	405
GN.20464	GN 17-60-M16-204-C3-W	204	60	45	45	29	M16	24	32	2	12	20	14	445
GN.20465	GN 17-80-M16-131-C3-W	131	80	45	45	29	M16	24	26	2	12	20	14	400
GN.20466	GN 17-80-M16-156-C3-W	156	80	45	45	29	M16	24	26	2	12	20	14	437
GN.20467	GN 17-80-M16-181-C3-W	181	80	45	45	29	M16	24	26	2	12	20	14	478
GN.20468	GN 17-80-M16-206-C3-W	206	80	45	45	29	M16	24	26	2	12	20	14	518
GN.20469	GN 17-80-M20-155-C3-W	155	80	56	56	36	M20	30	26	2	16	24	32	618
GN.20470	GN 17-80-M20-180-C3-W	180	80	56	56	36	M20	30	26	2	16	24	32	681
GN.20471	GN 17-80-M20-205-C3-W	205	80	56	56	36	M20	30	26	2	16	24	32	744
GN.20472	GN 17-80-M20-255-C3-W	255	80	56	56	36	M20	30	26	2	16	24	32	868
GN.20473	GN 17-80-M24-179-C3-W	179	80	67	67	42	M24	35	26	2	20	30	36	920
GN.20474	GN 17-80-M24-229-C3-W	229	80	67	67	42	M24	35	26	2	20	30	36	1098
GN.20475	GN 17-80-M24-279-C3-W	279	80	67	67	42	M24	35	26	2	20	30	36	1277
GN.20476	GN 17-100-M16-133-C3-W	133	100	45	45	29	M16	24	22	2	12	20	24	495
GN.20477	GN 17-100-M16-158-C3-W	158	100	45	45	29	M16	24	22	2	12	20	24	532
GN.20478	GN 17-100-M16-183-C3-W	183	100	45	45	29	M16	24	22	2	12	20	24	573
GN.20479	GN 17-100-M16-208-C3-W	208	100	45	45	29	M16	24	22	2	12	20	24	613
GN.20480	GN 17-100-M20-157-C3-W	157	100	56	56	36	M20	30	22	2	16	24	26	713
GN.20481	GN 17-100-M20-182-C3-W	182	100	56	56	36	M20	30	22	2	16	24	26	776
GN.20482	GN 17-100-M20-207-C3-W	207	100	56	56	36	M20	30	22	2	16	24	26	839
GN.20483	GN 17-100-M20-257-C3-W	257	100	56	56	36	M20	30	22	2	16	24	26	963
GN.20484	GN 17-100-M24-181-C3-W	181	100	67	67	42	M24	35	22	2	20	30	28	1015
GN.20485	GN 17-100-M24-231-C3-W	231	100	67	67	42	M24	35	22	2	20	30	28	1193
GN.20486	GN 17-100-M24-281-C3-W	281	100	67	67	42	M24	35	22	2	20	30	28	1372

Ganter Norm®

Proprietà dei modelli riservata ai termini di legge. Disegni e immagini non riproducibili se non citando la fonte.

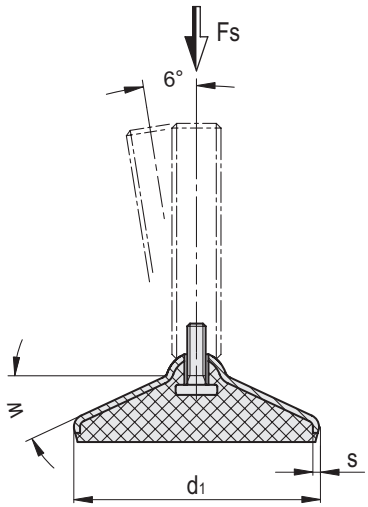

GN 17-VK

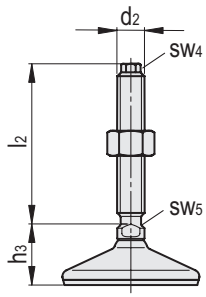

GN 17-W

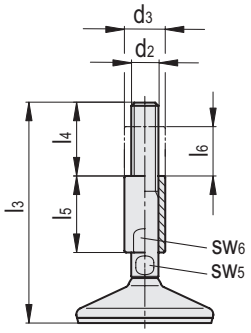

GN 17-VK

Codice	Descrizione	l_2	d_1	d_2	h_3	w [°]	s	sw_4	sw_5	Carico statico [KN]	⚖
GN.85032	GN 17-60-M16-75-C4-VK	75	60	M16	33	32	2	10	12	14	260
GN.85036	GN 17-60-M16-100-C4-VK	100	60	M16	33	32	2	10	12	14	299
GN.85040	GN 17-60-M16-125-C4-VK	125	60	M16	33	32	2	10	12	14	339
GN.85046	GN 17-60-M16-150-C4-VK	150	60	M16	33	32	2	10	12	14	379
GN.85112	GN 17-80-M16-75-C4-VK	75	80	M16	35	26	2	10	12	14	333
GN.85116	GN 17-80-M16-100-C4-VK	100	80	M16	35	26	2	10	12	14	372
GN.85120	GN 17-80-M16-125-C4-VK	125	80	M16	35	26	2	10	12	14	412
GN.85126	GN 17-80-M16-150-C4-VK	150	80	M16	35	26	2	10	12	14	452
GN.85144	GN 17-80-M20-100-C4-VK	100	80	M20	36	26	2	13	16	32	501
GN.85148	GN 17-80-M20-125-C4-VK	125	80	M20	36	26	2	13	16	32	563
GN.85152	GN 17-80-M20-150-C4-VK	150	80	M20	36	26	2	13	16	32	625
GN.85160	GN 17-80-M20-200-C4-VK	200	80	M20	36	26	2	13	16	32	749
GN.85172	GN 17-80-M24-100-C4-VK	100	80	M24	38	26	2	17	20	36	674
GN.85178	GN 17-80-M24-150-C4-VK	150	80	M24	38	26	2	17	20	36	853
GN.85184	GN 17-80-M24-200-C4-VK	200	80	M24	38	26	2	17	20	36	1030
GN.85252	GN 17-100-M16-75-C4-VK	75	100	M16	37	22	2	10	12	24	428
GN.85256	GN 17-100-M16-100-C4-VK	100	100	M16	37	22	2	10	12	24	467
GN.85260	GN 17-100-M16-125-C4-VK	125	100	M16	37	22	2	10	12	24	507
GN.85266	GN 17-100-M16-150-C4-VK	150	100	M16	37	22	2	10	12	24	547
GN.85284	GN 17-100-M20-100-C4-VK	100	100	M20	38	22	2	13	16	26	696
GN.85288	GN 17-100-M20-125-C4-VK	125	100	M20	38	22	2	13	16	26	658
GN.85292	GN 17-100-M20-150-C4-VK	150	100	M20	38	22	2	13	16	26	720
GN.85300	GN 17-100-M20-200-C4-VK	200	100	M20	38	22	2	13	16	26	844
GN.85312	GN 17-100-M24-100-C4-VK	100	100	M24	40	22	2	17	20	28	769
GN.85318	GN 17-100-M24-150-C4-VK	150	100	M24	40	22	2	17	20	28	948
GN.85324	GN 17-100-M24-200-C4-VK	200	100	M24	40	22	2	17	20	28	1125

GN 17-W

Codice	Descrizione	l_3	d_1	l_4	l_5	l_6	d_2	d_3	w [°]	s	sw_5	sw_6	Carico statico [KN]	⚖
GN.85043	GN 17-60-M16-129-C4-W	129	60	45	45	29	M16	24	32	2	12	20	14	350
GN.85049	GN 17-60-M16-154-C4-W	154	60	45	45	29	M16	24	32	2	12	20	14	390
GN.85051	GN 17-60-M16-179-C4-W	179	60	45	45	29	M16	24	32	2	12	20	14	430
GN.85055	GN 17-60-M16-204-C4-W	204	60	45	45	29	M16	24	32	2	12	20	14	469
GN.85123	GN 17-80-M16-131-C4-W	131	80	45	45	29	M16	24	26	2	12	20	14	423
GN.85129	GN 17-80-M16-156-C4-W	156	80	45	45	29	M16	24	26	2	12	20	14	463
GN.85131	GN 17-80-M16-181-C4-W	181	80	45	45	29	M16	24	26	2	12	20	14	503
GN.85135	GN 17-80-M16-206-C4-W	206	80	45	45	29	M16	24	26	2	12	20	14	542
GN.85155	GN 17-80-M20-155-C4-W	155	80	56	56	36	M20	30	26	2	16	24	32	659
GN.85157	GN 17-80-M20-180-C4-W	180	80	56	56	36	M20	30	26	2	16	24	32	721
GN.85163	GN 17-80-M20-205-C4-W	205	80	56	56	36	M20	30	26	2	16	24	32	783
GN.85167	GN 17-80-M20-255-C4-W	255	80	56	56	36	M20	30	26	2	16	24	32	908
GN.85181	GN 17-80-M24-179-C4-W	179	80	67	67	42	M24	35	26	2	20	30	36	988
GN.85187	GN 17-80-M24-229-C4-W	229	80	67	67	42	M24	35	26	2	20	30	36	1165
GN.85189	GN 17-80-M24-279-C4-W	279	80	67	67	42	M24	35	26	2	20	30	36	1345
GN.85263	GN 17-100-M16-133-C4-W	133	100	45	45	29	M16	24	22	2	12	20	24	518
GN.85269	GN 17-100-M16-158-C4-W	158	100	45	45	29	M16	24	22	2	12	20	24	558
GN.85271	GN 17-100-M16-183-C4-W	183	100	45	45	29	M16	24	22	2	12	20	24	598
GN.85275	GN 17-100-M16-208-C4-W	208	100	45	45	29	M16	24	22	2	12	20	24	637
GN.85295	GN 17-100-M20-157-C4-W	157	100	56	56	36	M20	30	22	2	16	24	26	754
GN.85297	GN 17-100-M20-182-C4-W	182	100	56	56	36	M20	30	22	2	16	24	26	816
GN.85303	GN 17-100-M20-207-C4-W	207	100	56	56	36	M20	30	22	2	16	24	26	878
GN.85307	GN 17-100-M20-257-C4-W	257	100	56	56	36	M20	30	22	2	16	24	26	963
GN.85321	GN 17-100-M24-181-C4-W	181	100	67	67	42	M24	35	22	2	20	30	28	1085
GN.85327	GN 17-100-M24-231-C4-W	231	100	67	67	42	M24	35	22	2	20	30	28	1260
GN.85329	GN 17-100-M24-281-C4-W	281	100	67	67	42	M24	35	22	2	20	30	28	1440

Proprietà dei modelli riservata ai termini di legge. Disegni e immagini non riproducibili se non citando la fonte.

Ganter Norm

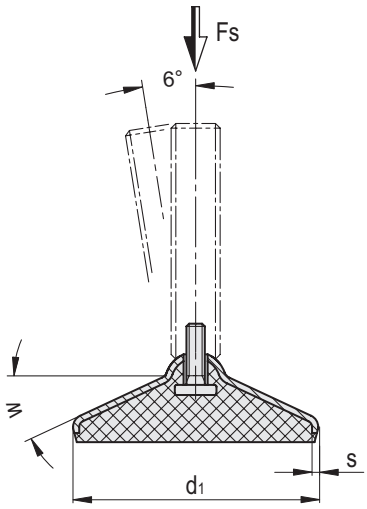

GN 17-VK

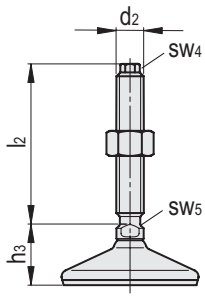

GN 17-W

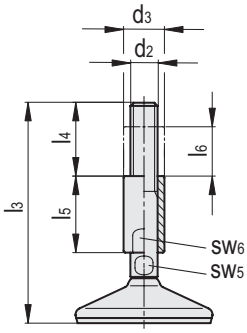

GN 17-VK

INOX STAINLESS STEEL

Codice	Descrizione	l_2	d_1	d_2	h_3	w [°]	s	sw_4	sw_5	Carico statico [KN]	⚖
GN.85034	GN 17-60-M16-75-C7-VK	75	60	M16	33	32	2	10	12	14	260
GN.85038	GN 17-60-M16-100-C7-VK	100	60	M16	33	32	2	10	12	14	299
GN.85042	GN 17-60-M16-125-C7-VK	125	60	M16	33	32	2	10	12	14	339
GN.85048	GN 17-60-M16-150-C7-VK	150	60	M16	33	32	2	10	12	14	379
GN.85114	GN 17-80-M16-75-C7-VK	75	80	M16	35	26	2	10	12	14	333
GN.85118	GN 17-80-M16-100-C7-VK	100	80	M16	35	26	2	10	12	14	372
GN.85122	GN 17-80-M16-125-C7-VK	125	80	M16	35	26	2	10	12	14	412
GN.85128	GN 17-80-M16-150-C7-VK	150	80	M16	35	26	2	10	12	14	452
GN.85146	GN 17-80-M20-100-C7-VK	100	80	M20	36	26	2	13	16	32	501
GN.85150	GN 17-80-M20-125-C7-VK	125	80	M20	36	26	2	13	16	32	563
GN.85154	GN 17-80-M20-150-C7-VK	150	80	M20	36	26	2	13	16	32	625
GN.85162	GN 17-80-M20-200-C7-VK	200	80	M20	36	26	2	13	16	32	749
GN.85174	GN 17-80-M24-100-C7-VK	100	80	M24	38	26	2	17	20	36	674
GN.85180	GN 17-80-M24-150-C7-VK	150	80	M24	38	26	2	17	20	36	853
GN.85186	GN 17-80-M24-200-C7-VK	200	80	M24	38	26	2	17	20	36	1030
GN.85254	GN 17-100-M16-75-C7-VK	75	100	M16	37	22	2	10	12	24	428
GN.85258	GN 17-100-M16-100-C7-VK	100	100	M16	37	22	2	10	12	24	467
GN.85262	GN 17-100-M16-125-C7-VK	125	100	M16	37	22	2	10	12	24	507
GN.85268	GN 17-100-M16-150-C7-VK	150	100	M16	37	22	2	10	12	24	547
GN.85286	GN 17-100-M20-100-C7-VK	100	100	M20	38	22	2	13	16	26	696
GN.85290	GN 17-100-M20-125-C7-VK	125	100	M20	38	22	2	13	16	26	658
GN.85294	GN 17-100-M20-150-C7-VK	150	100	M20	38	22	2	13	16	26	720
GN.85302	GN 17-100-M20-200-C7-VK	200	100	M20	38	22	2	13	16	26	844
GN.85314	GN 17-100-M24-100-C7-VK	100	100	M24	40	22	2	17	20	28	769
GN.85320	GN 17-100-M24-150-C7-VK	150	100	M24	40	22	2	17	20	28	948
GN.85326	GN 17-100-M24-200-C7-VK	200	100	M24	40	22	2	17	20	28	1125

GN 17-W

Codice	Descrizione	l_3	d_1	l_4	l_5	l_6	d_2	d_3	w [°]	s	sw_5	sw_6	Carico statico [KN]	⚖
GN.85044	GN 17-60-M16-129-C7-W	129	60	45	45	29	M16	24	32	2	12	20	14	350
GN.85050	GN 17-60-M16-154-C7-W	154	60	45	45	29	M16	24	32	2	12	20	14	390
GN.85052	GN 17-60-M16-179-C7-W	179	60	45	45	29	M16	24	32	2	12	20	14	430
GN.85056	GN 17-60-M16-204-C7-W	204	60	45	45	29	M16	24	32	2	12	20	14	469
GN.85124	GN 17-80-M16-131-C7-W	131	80	45	45	29	M16	24	26	2	12	20	14	423
GN.85130	GN 17-80-M16-156-C7-W	156	80	45	45	29	M16	24	26	2	12	20	14	463
GN.85132	GN 17-80-M16-181-C7-W	181	80	45	45	29	M16	24	26	2	12	20	14	503
GN.85136	GN 17-80-M16-206-C7-W	206	80	45	45	29	M16	24	26	2	12	20	14	542
GN.85156	GN 17-80-M20-155-C7-W	155	80	56	56	36	M20	30	26	2	16	24	32	659
GN.85158	GN 17-80-M20-180-C7-W	180	80	56	56	36	M20	30	26	2	16	24	32	721
GN.85164	GN 17-80-M20-205-C7-W	205	80	56	56	36	M20	30	26	2	16	24	32	783
GN.85168	GN 17-80-M20-255-C7-W	255	80	56	56	36	M20	30	26	2	16	24	32	908
GN.85182	GN 17-80-M24-179-C7-W	179	80	67	67	42	M24	35	26	2	20	30	36	988
GN.85188	GN 17-80-M24-229-C7-W	229	80	67	67	42	M24	35	26	2	20	30	36	1165
GN.85190	GN 17-80-M24-279-C7-W	279	80	67	67	42	M24	35	26	2	20	30	36	1345
GN.85264	GN 17-100-M16-133-C7-W	133	100	45	45	29	M16	24	22	2	12	20	24	518
GN.85270	GN 17-100-M16-158-C7-W	158	100	45	45	29	M16	24	22	2	12	20	24	558
GN.85272	GN 17-100-M16-183-C7-W	183	100	45	45	29	M16	24	22	2	12	20	24	598
GN.85276	GN 17-100-M16-208-C7-W	208	100	45	45	29	M16	24	22	2	12	20	24	637
GN.85296	GN 17-100-M20-157-C7-W	157	100	56	56	36	M20	30	22	2	16	24	26	754
GN.85298	GN 17-100-M20-182-C7-W	182	100	56	56	36	M20	30	22	2	16	24	26	816
GN.85304	GN 17-100-M20-207-C7-W	207	100	56	56	36	M20	30	22	2	16	24	26	878
GN.85308	GN 17-100-M20-257-C7-W	257	100	56	56	36	M20	30	22	2	16	24	26	963
GN.85322	GN 17-100-M24-181-C7-W	181	100	67	67	42	M24	35	22	2	20	30	28	1085
GN.85328	GN 17-100-M24-231-C7-W	231	100	67	67	42	M24	35	22	2	20	30	28	1260
GN.85330	GN 17-100-M24-281-C7-W	281	100	67	67	42	M24	35	22	2	20	30	28	1440

Ganter Norm®

Proprietà dei modelli riservata ai termini di legge. Disegni e immagini non riproducibili se non citando la fonte.

7/2026

elesa®